SPRINKLER

LUMO

FOR THE IRRIGATION

FOR THE FUTURE

LUMO®

www.lumaoirrigation.com

YUYAO LUMAO SPRINKLER MANUFACTURING CO.,LTD.

NO 88,ZHENXI ROAD HEMUDU TOWN ,YUYAO CITY, NINGBO ZHEJIANG CHINA

FLOPPY SPRINKLER
Rain On Demand LUMO

Floppy sprinkler (rainlike sprinkler)
Item:LM-F001
Size: ¾" male thread
Flow rate: 730L/H
Radius:6.0-9.0m
Working pressure:1.8 -6.0bar

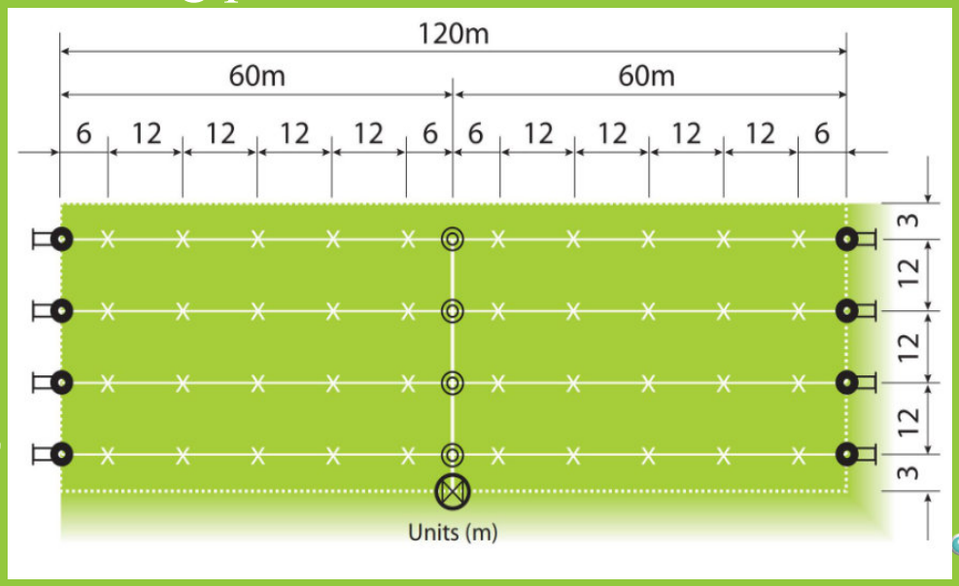

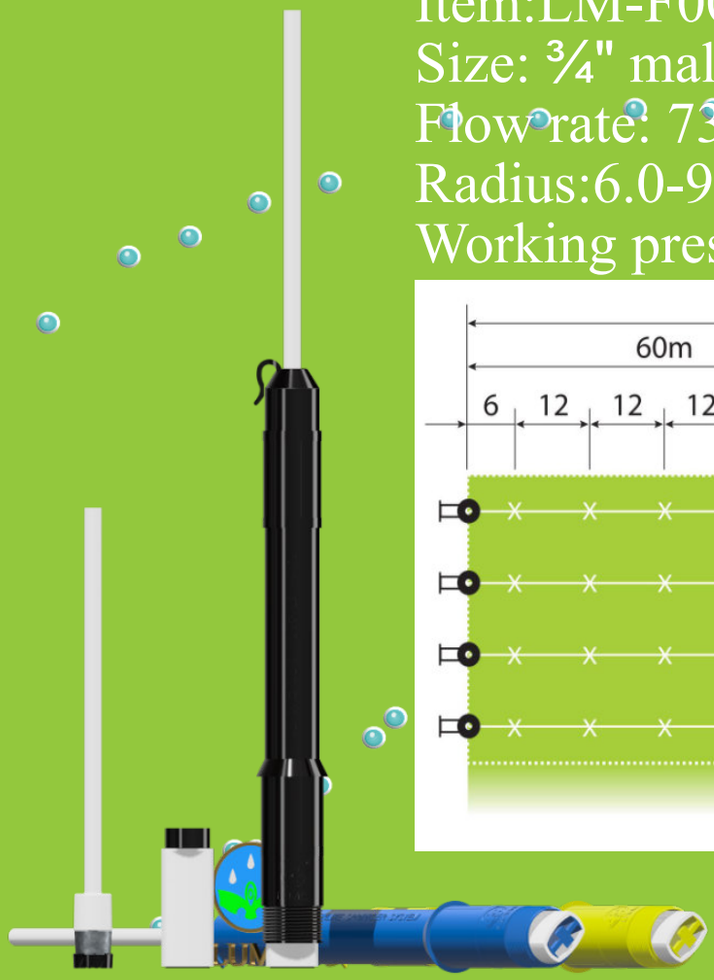

NEW

Item : LM-F002
Size: ¾" male thread
Flow rate: 1100L/H
Radius:6.0-9.0m
Working pressure:1.8 -6.0bar

SPRINKLER LUMO

LUMO 001 1½"

2.0-5.0bar

20.0-41.0m

7.2-36.5m³/h

Nozzle \ Pressure	2bar		3bar		4bar		5bar	
mm	Flow l/min	Radius m	Flow l/min	Radius m	Flow l/min	Radius m	Flow l/min	Radius m
12mm-6mm	159	22	194	25	224	28	252	31
14mm-6mm	205	24	251	27	290	30	324	33
16mm-6mm	257	26	315	29	364	32	406	35
18mm-6mm	318	28	389	31	449	34	503	37
20mm-6mm	386	30	471	33	545	37	609	41

LUMO 26S 2"

1.5-5.0bar

20.0-43.0m

7.5-39.5m³/h

LUMO 26 2"

1.5-5.0bar

20.0-43.0m

7.5-39.5m³/h

Nozzle \ Pressure	2bar		3bar		4bar		5bar	
mm	Flow l/min	Radius m	Flow l/min	Radius m	Flow l/min	Radius m	Flow l/min	Radius m
12mm-8mm	184	23	224	27	259	30	-	-
14mm-8mm	230	25	280	29	325	32	364	34
16mm-8mm	282	27	344	31	399	34	446	37
18mm-8mm	343	28	434	33	506	36	561	40
20mm-8mm	411	29	520	34	606	38	657	43

SPRINKLER LUMO

LUMO P25 2"
2.0-5.0bar
25.0-36.0m
16.8-35.2m³/h

LUMO P25S 2"
2.0-5.0bar
25.0-36.0m
16.8-35.2m³/h

Nozzle / Pressure	2bar		3bar		4bar		5bar	
mm	Flow l/min	Radius m	Flow l/min	Radius m	Flow l/min	Radius m	Flow l/min	Radius m
12mm-8.5mm	280	25	294	27	315	29	336	31
14mm-8.5mm	310	26	324	28	348	30	390	32
16mm-8.5mm	430	30	468	32	534	34	588	36

LUMO P24S 1½"
2.0-5.0bar
22.0-34.0m
9.9-25.8m³/h

LUMO P24 1½"
2.0-5.0bar
20.0-34.0m
9.9-25.8m³/h

Nozzle / Pressure	2bar	3bar	4bar	5bar

mm	Flow l/min	Radius m	Flow l/min	Radius m	Flow l/min	Radius m	Flow l/min	Radius m
12mm-7mm	165	22	198	25	221	27	-	-
14mm-7mm	218	23	264	27	305	29	330	31
16mm-7mm	321	28	370	30	401	32	430	34

SPRINKLER LUMO

LUMO 16S 1½"
2.0-5.0bar
20.0-33.0m
9.1-23.4m³/h

Nozzle \ Pressure	2bar		3bar		4bar		5bar	
mm	Flow l/min	Radius m	Flow l/min	Radius m	Flow l/min	Radius m	Flow l/min	Radius m
12mm-5mm	152	20	182	24	211	27	236	30
14mm-5mm	195	21	239	25	277	29	309	31
16mm-5mm	247	22	303	26	351	30	391	33

LUMO 25S 1½"
2.0-5.0bar
17.5-29.0m
5.1-24.8m³/h

LUMO 25 1½"
2.0-5.0bar
17.5-29.0m
5.1-24.8m³/h

Nozzle \ Pressure	2bar		3bar		4bar		5bar	
mm	Flow l/min	Radius m	Flow l/min	Radius m	Flow l/min	Radius m	Flow l/min	Radius m
8mm-7mm	99	17.5	121	19.5	140	21	-	-
10mm-7mm	130	18	159	21	184	23	207	24.5
12mm-7mm	169	19.5	207	22	239	25	269	27.5
14mm-7mm	215	20.5	264	23.5	305	26	342	28.5
16mm-7mm	267	21	328	24	379	26.5	414	29

SPRINKLER

LUMO

LUMO 25P 1½"
1.5-5.0bar
16.0-29.0m
5.1-24.8m³/h

LUMO 25C 1½"
1.5-5.0bar
16.0-29.0m
5.1-24.8m³/h

Nozzle \ Pressure	2bar		3bar		4bar		5bar	
mm	Flow l/min	Radius m	Flow l/min	Radius m	Flow l/min	Radius m	Flow l/min	Radius m
8mm-7mm	99	17.5	121	19.5	140	21	-	-
10mm-7mm	130	18	159	21	184	23	207	24.5
12mm-7mm	169	19.5	207	22	239	25	269	27.5
14mm-7mm	215	20.5	264	23.5	305	26	342	28.5
16mm-7mm	267	21	328	24	379	26.5	414	29

LUMO 23S 1¼"
1.5-5.0bar
16.5-30.0m
3.7-20.0m³/h

LUMO 23BP 1¼"
1.5-5.0bar
16.5-30.0m
3.7-20.0m³/h

LUMO 23P 1¼"
1.5-5.0bar
16.5-30.0m
3.7-20.0m³/h

Nozzle \ Pressure	2bar		3bar		4bar		5bar	
mm	Flow l/min	Radius m	Flow l/min	Radius m	Flow l/min	Radius m	Flow l/min	Radius m
8mm-4mm	71	17.5	87	19.5	100	21	-	-
10mm-4mm	106	18	130	20	155	21.5	170	23.5
12mm-4mm	149	21	182	23.5	211	26	236	28
14mm-4mm	197	22.5	241	24	278	27	311	29
16mm-4mm	318	23	388	25	345	28	380	30

SPRINKLER LUMO

LUMO 18S 1½"
1.5-5.0bar
10.0-20.0m
2.9-7.4m³/h

Nozzle \ Pressure	1.5bar		2bar		3bar		4bar	
mm	Flow l/min	Radius m	Flow l/min	Radius m	Flow l/min	Radius m	Flow l/min	Radius m
8mm	49	15.5	57	17	69	19	80	20.5
10mm	76	17	88	18	107	20.5	124	22
12mm	110	17	127	19	155	21	179	23.5
14mm	155	18	175	20	205	22	230	24.5

LUMO 21S 1"
2.0-5.0bar
15.0-23.0m
2.7-9.7m³/h

LUMO 21BP 1"
2.0-5.0bar
15.0-23.0m
2.7-9.7m³/h

LUMO 21P 1"
2.0-5.0bar
15.0-23.0m
2.7-9.7m³/h

Nozzle \ Pressure	2bar		3bar		4bar		5bar	
mm	Flow l/min	Radius m	Flow l/min	Radius m	Flow l/min	Radius m	Flow l/min	Radius m
6mm-4mm	46	15	56	17	65	18	-	-
8mm-4mm	71	16.5	86	18	100	19	-	-
10mm-4mm	102	17	124	19.5	144	21	161	23

LUMO 19S 1"
1.5-5.0bar
13.0-19.5m
1.6-7.5m³/h

Nozzle \ Pressure	1.5bar		2bar		3bar		4bar	
mm	Flow l/min	Radius m	Flow l/min	Radius m	Flow l/min	Radius m	Flow l/min	Radius m
6mm	28	13	32	14.5	39	16.5	45	17.5
8mm	50	14.5	57	15.5	70	17.5	80	18.5
10mm	75	15.5	86	16.5	100	18.5	120	19.5

SPRINKLER

LUMO

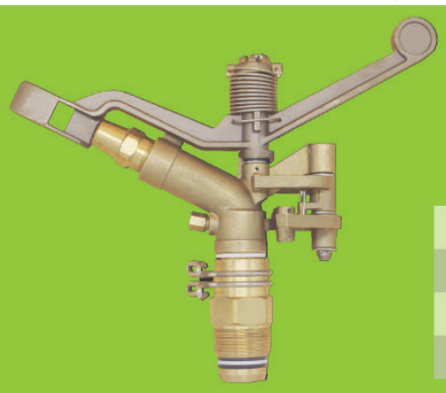

LUMO 150 1¼"
4.0-7.0bar
25.0-37.0m
6.2-28.0m³/h

Nozzle \ Pressure	4bar		5bar		6bar		7bar	
mm	Flow l/h	Radius m	Flow l/h	Radius m	Flow l/h	Radius m	Flow l/h	Radius m
9mm-3.2mm	6200	25	7000	26	7800	27	8500	28
10mm-3.2mm	7700	26	8600	27	9500	28	10300	29
11mm-3.2mm	9400	27	10600	28	11700	29	12600	30
13mm-6.3mm	14300	29	16200	31	18200	34	19500	36
14.5mm-6.3mm	16300	30	18300	32	20000	34.5	21500	36.5

16mm-6.3mm	20200	31	23200	33	25800	36	28000	37

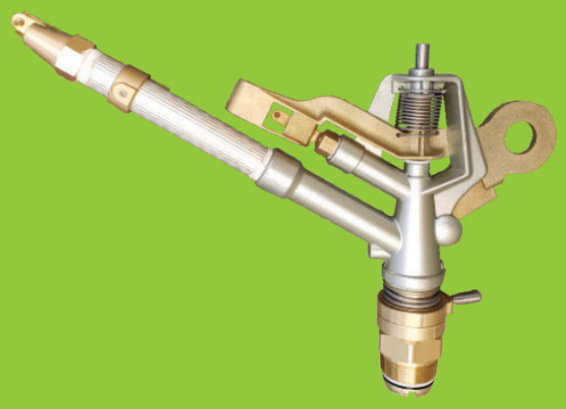

LUMO 93 1½"
4.0-7.0bar
26.0-38.5m
7.5-30.5m³/h

Nozzle \ Pressure	4bar		5bar		6bar		7bar	
mm	Flow l/min	Radius m	Flow l/min	Radius m	Flow l/min	Radius m	Flow l/min	Radius m
10mm-3.0mm	156	26	175	28.5	194	29.5	215	31.5
12mm-3.0mm	216	28	242	30.5	270	31.5	364	32.5
14mm-7.0mm	279	32	312	34	345	35	378	36
16mm-7.0mm	351	34	392	36.5	432	37.5	475	38.5

SPRINKLER LUMO

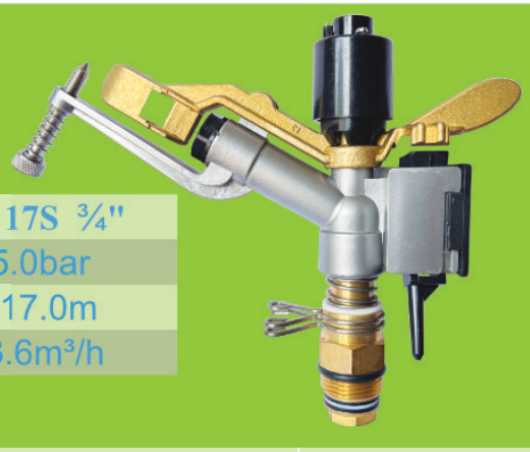

LUMO 17S ¾"
1.5-5.0bar
11.0-17.0m
0.7-3.6m³/h

Nozzle \ Pressure	1.5bar	2bar	3bar	4bar

mm	Flow l/min	Radius m	Flow l/min	Radius m	Flow l/min	Radius m	Flow l/min	Radius m
4mm	12	11	14	12	17	13	20	15
5mm	20	12	22	13	27	14	32	16
6mm	28	13	32	14	39	15	45	16.5
7mm	37	13.5	42	14.5	52	16	60	17

LUMO 155 1¼"
4.0-7.0bar
25.2-34.5m
6.5-22.5m³/h

Nozzle \ Pressure	4bar		5bar		6bar		7bar	
mm	Flow l/h	Radius m	Flow l/h	Radius m	Flow l/h	Radius m	Flow l/h	Radius m
8.0-6.3-3.2mm	8500	25.5	9500	26.5	10400	27	11200	28
10.0-6.3-3.2mm	11000	26.5	12300	27.5	13500	29	14600	30
12.0-6.3-3.2mm	13200	28.5	14900	30	16500	31	18000	32
14.0-6.3-3.2mm	17000	31.5	19100	32.5	20800	33.5	22300	34.5

SPRINKLER LUMO

LM9360 1"
3.0-6.0bar
18.0-24.5m
2.3-8.0m³/h

Nozzle \ Pressure	3bar	4bar	5bar	6bar

mm	Flow l/h	Radius m	Flow l/h	Radius m	Flow l/h	Radius m	Flow l/h	Radius m
4.8mm-3.2mm	2265	18.0	2735	18.5	3030	19.5	3300	20.5
5.6mm-3.2mm	2815	19.0	3265	19.5	3660	20.5	3840	21.5
6.4mm-3.2mm	3490	20.0	4045	20.5	4500	21.5	4950	22.5
7.2mm-3.2mm	4030	20.0	4740	21.5	5380	22.5	5755	23.5
8.0mm-3.2mm	6700	21.0	6400	22.5	7260	23.5	8000	24.5

LM9230S 1"
3.0-7.0bar
19.8-26.3m
3.94-10.5m³/h

LM9230 1"
3.0-7.0bar
19.8-26.3m
3.94-10.5m³/h

Nozzle \ Pressure	3bar		4bar		5bar		6bar	
mm	Flow l/h	Radius m	Flow l/h	Radius m	Flow l/h	Radius m	Flow l/h	Radius m
8mm	3940	19.8	4550	20.8	5090	21.8	5580	22.8
9mm	4990	20.8	5760	21.8	6440	23.0	7060	24.3
10mm	6160	21.4	7120	22.7	7950	24.1	8710	25.4
11mm	7460	21.8	8610	23.4	9630	25.4	1054	26.3

SPRINKLER

LUMO

LM1020 1"
2.0-4.0bar
15.0-20.0m
2.7-5.4m³/h

Nozzle \ Pressure	2bar		3bar		4bar		5bar	
mm	Flow l/h	Radius m	Flow l/h	Radius m	Flow l/h	Radius m	Flow l/h	Radius m
5.5mm-4.75mm	2700	15.0	3240	16.5	3960	17.5	4500	18.5
6.25mm-4.75mm	3240	16.5	3960	17.5	4500	18.5	5400	19.5
7.0mm-4.75mm	3960	16.5	4680	18.5	5400	19.5	6400	20.5

LM9011 ¾"
2.0-5.0bar
13.0-17.0m
1.32-2.94m³/h

Nozzle \ Pressure	2bar		3bar		4bar		5bar	
mm	Flow l/h	Radius m	Flow l/h	Radius m	Flow l/h	Radius m	Flow l/h	Radius m
4.0mm-3.25mm	1332	13.0	1584	14.0	1836	15.0	2086	16.0
4.0mm-4.0mm	1728	13.0	1980	14.5	2304	15.5	2635	16.5
4.0mm-4.5mm	1980	13.0	2268	15.0	2592	16.0	2942	17.0

SPRINKLER LUMO

LM9705 ¾"
2.0-5.0bar
12.5-16.5m
0.70-2.66m³/h

Nozzle \ Pressure	2bar		3bar		4bar		5bar	
mm	Flow l/h	Radius m	Flow l/h	Radius m	Flow l/h	Radius m	Flow l/h	Radius m
3.6mm	700	12.5	844	13.0	934	13.5	1100	14.0
4.0mm	860	12.8	1078	13.4	1216	14.0	1360	14.5
4.4mm	1030	13.1	1291	14.0	1477	14.6	1620	15.2
4.8mm	1220	13.4	1538	14.5	1773	15.0	1950	15.5
5.2mm	1440	14.0	1764	14.8	2058	15.5	2300	16.0
5.6mm	1670	14.5	2076	15.0	2420	16.0	2660	16.5

LM9705N ¾"
2.0-5.0bar
12.5-16.5m
0.99-3.58m³/h

Nozzle \ Pressure	2bar		3bar		4bar		5bar	
mm	Flow l/h	Radius m	Flow l/h	Radius m	Flow l/h	Radius m	Flow l/h	Radius m
3.6mm-2.4mm	990	12.5	1258	13.0	1442	13.5	1570	14.0
4.0mm-2.4mm	1180	12.8	1496	13.4	1715	14.0	1850	14.5
4.4mm-2.4mm	1360	13.1	1685	14.0	1945	14.6	2110	15.2
4.8mm-2.4mm	1550	13.4	1966	14.5	2248	15.0	2430	15.5
5.2mm-3.2mm	2020	14.0	2359	14.8	2839	15.5	3260	16.0
5.6mm-3.2mm	2270	14.5	2850	15.0	3070	16.0	3580	16.5

SPRINKLER LUMO

LM9706 ¾"
2.0-5.0bar
12.5-18.5m
0.99-3.58m³/h

Nozzle \ Pressure	2bar		3bar		4bar		5bar	
mm	Flow l/h	Radius m	Flow l/h	Radius m	Flow l/h	Radius m	Flow l/h	Radius m
3.6mm-2.4mm	990	12.5	1258	13.0	1442	13.5	1570	14.5
4.0mm-2.4mm	1180	13.5	1496	14.0	1715	14.5	1850	15.5
4.4mm-2.4mm	1360	14.0	1685	15.0	1945	15.5	2110	16.5
4.8mm-2.4mm	1550	15.5	1966	16.0	2248	16.5	2430	17.5
5.2mm-3.2mm	2020	16.0	2359	16.5	2839	17.0	3260	18.0
5.6mm-3.2mm	2270	16.5	2850	17.0	3070	17.5	3580	18.5

LM9135 ¾"
2.0-5.0bar
12.5-18.5m
0.99-3.58m³/h

Nozzle \ Pressure	2bar		3bar		4bar		5bar	
mm	Flow l/h	Radius m	Flow l/h	Radius m	Flow l/h	Radius m	Flow l/h	Radius m
3.6mm-2.4mm	990	12.5	1258	13.0	1442	13.5	1570	14.5
4.0mm-2.4mm	1180	13.5	1496	14.0	1715	14.5	1850	15.5
4.4mm-2.4mm	1360	14.0	1685	15.0	1945	15.5	2110	16.5
4.8mm-2.4mm	1550	15.5	1966	16.0	2248	16.5	2430	17.5
5.2mm-3.2mm	2020	16.0	2359	16.5	2839	17.0	3260	18.0
5.6mm-3.2mm	2270	16.5	2850	17.0	3070	17.5	3580	18.5

SPRINKLER LUMO

LM9130 ¾"
2.0-5.0bar
12.5-16.5m
0.99-3.58m³/h

Nozzle \ Pressure	2bar		3bar		4bar		5bar	
mm	Flow l/h	Radius m	Flow l/h	Radius m	Flow l/h	Radius m	Flow l/h	Radius m
3.6mm-2.4mm	990	12.5	1258	13.0	1442	13.5	1570	14.0
4.0mm-2.4mm	1180	12.8	1496	13.4	1715	14.0	1850	14.5
4.4mm-2.4mm	1360	13.1	1685	14.0	1945	14.6	2110	15.2
4.8mm-2.4mm	1550	13.4	1966	14.5	2248	15.0	2430	15.5
5.2mm-3.2mm	2020	14.0	2359	14.8	2839	15.5	3260	16.0
5.6mm-3.2mm	2270	14.5	2850	15.0	3070	16.0	3580	16.5

LM9703 ¾&½"
2.0-5.0bar
11.5-15.0m
0.94-2.15m³/h

Nozzle \ Pressure	2bar		3bar		4bar		5bar	
mm	Flow l/h	Radius m	Flow l/h	Radius m	Flow l/h	Radius m	Flow l/h	Radius m
3.5mm-2.0mm	940	11.5	1020	13.0	1170	13.5	1320	14.0
4.0mm-2.0mm	1080	12.0	1280	12.5	1475	14.0	1670	14.5
4.0mm-2.5mm	1190	12.0	1380	12.5	1580	14.0	1790	14.5
4.5mm-2.0mm	1270	12.5	1520	14.0	1770	14.5	2020	15.0
4.5mm-2.5mm	1430	12.5	1660	14.0	1890	14.5	2150	15.0

SPRINKLER

LUMO

LM9704 ½"
1.0-4.0bar
9.0-13.0m
0.24-1.18m³/h

LM9708 ½"
1.0-4.0bar
9.0-13.0m
0.24-1.18m³/h

Nozzle \ Pressure	1bar		2bar		3bar		4bar	
mm	Flow l/h	Radius m	Flow l/h	Radius m	Flow l/h	Radius m	Flow l/h	Radius m
2.4mm	240	9.0	340	10.0	410	11.0	480	12.0
2.8mm	310	9.5	420	10.0	520	11.0	600	12.0
3.0mm	360	9.5	500	10.5	610	11.5	690	12.0
3.2mm	400	10.0	550	10.5	660	11.5	760	12.0
3.5mm	480	10.0	660	11.0	800	11.5	910	12.5
4.0mm	620	10.5	850	11.5	1040	12.0	1180	13.0

LM9728 ½"
1.0-4.0bar
10.0-13.0m
0.55-2.3m³/h

LMG31 ¾"
1.0-4.0bar
10.0-13.0m
0.55-2.3m³/h

LM9806 ½"
1.0-4.0bar
10.0-13.0m
0.55-2.3m³/h

LM9420 ¾"
1.0-4.0bar
10.0-13.0m
0.55-2.3m³/h

Nozzle \ Pressure	1bar		2bar		3bar		4bar	
mm	Flow l/h	Radius m	Flow l/h	Radius m	Flow l/h	Radius m	Flow l/h	Radius m
3.2mm-2.4mm	550	10.0	690	11.5	850	12.0	1030	12.2
3.6mm-2.4mm	790	10.0	980	11.7	1190	12.1	1390	12.3
4.0mm-2.4mm	840	10.5	1070	11.8	1330	12.3	1500	12.5
4.4mm-2.4mm	1110	10.5	1360	11.4	1690	12.5	1930	13.0
4.8mm-3.2mm	1350	11.0	1650	12.0	2030	12.6	2340	13.0

SPRINKLER

LUMO

LM9811B 1"
1.5-5.0bar
13.0-22.0m
1.3-5.5m³/h

LM9811 1"
1.5-4.0bar
13.0-22.0m
1.3-5.5m³/h

Nozzle \ Pressure	2bar		3bar		4bar		5bar	
mm	Flow l/h	Radius m	Flow l/h	Radius m	Flow l/h	Radius m	Flow l/h	Radius m
4.8mm-2.4mm	1840	15.2	2260	16.7	2600	17.1	2860	17.4
5.2mm-3.2mm	2070	16.1	2540	17.1	2920	17.9	3230	18.2
5.6mm-3.2mm	2310	16.2	2830	17.9	3240	18.9	3550	19.2
6.4mm-3.2mm	2810	16.8	3440	18.9	3980	20.0	4410	20.6
7.2mm-3.2mm	3440	17.6	4150	19.9	4860	21.1	5550	22.1
7.5mm-3.5mm	3550	17.8	4320	20.0	5060	21.3	5750	22.3

LM9719 1"
1.5-4.0bar
12.0-18.0m
0.86-5.3m³/h

Nozzle \ Pressure	1bar		2bar		3bar		4bar	
mm	Flow l/h	Radius m	Flow l/h	Radius m	Flow l/h	Radius m	Flow l/h	Radius m
3.8mm-2.4mm	760	12.5	1160	13.0	1520	14.5	1930	15.5
5.0mm-4.5mm	1890	12.0	2380	12.5	2920	14.0	3470	15.5

LM9721 ¾"
1.0-4.0bar
12.0-15.5m
0.74-3.3m³/h

LM9720 ¾"
1.0-4.0bar
12.0-15.5m
0.74-3.4m³/h

Nozzle \ Pressure	1bar	2bar	3bar	4bar

mm	Flow l/h	Radius m	Flow l/h	Radius m	Flow l/h	Radius m	Flow l/h	Radius m
3.8mm-2.4mm	740	12.0	1150	13.0	1510	14.5	1940	15.5
5.0mm-4.5mm	1890	12.0	2360	12.5	2890	14.0	3370	15.5

SPRINKLER

LUMO

LM9136 ¾"
1.5-5.0bar
11.0-18.5m
0.7-3.58m³/h

LM9136P ¾"
1.5-5.0bar
11.0-18.5m
0.7-3.58m³/h

Nozzle \ Pressure	2bar		3bar		4bar		5bar	
mm	Flow l/h	Radius m	Flow l/h	Radius m	Flow l/h	Radius m	Flow l/h	Radius m
3.6mm-2.4mm	990	12.5	1258	13.0	1442	13.5	1570	14.5
4.0mm-2.4mm	1180	13.5	1496	14.0	1715	14.5	1850	15.5
4.4mm-2.4mm	1360	14.0	1685	15.0	1945	15.5	2110	16.5
4.8mm-2.4mm	1550	15.5	1966	16.0	2248	16.5	2430	17.5
5.2mm-3.2mm	2020	16.0	2359	16.5	2839	17.0	3260	18.0
5.6mm-3.2mm	2270	16.5	2850	17.0	3070	17.5	3580	18.5

LM9706P ¾"
1.5-5.0bar
11.0-18.5m
0.7-3.58m³/h

LM9706N ¾"
1.5-5.0bar
11.0-18.5m
0.7-3.58m³/h

Nozzle \ Pressure	2bar		3bar		4bar		5bar	
mm	Flow l/h	Radius m	Flow l/h	Radius m	Flow l/h	Radius m	Flow l/h	Radius m
3.6mm-2.4mm	990	12.5	1258	13.0	1442	13.5	1570	14.5
4.0mm-2.4mm	1180	13.5	1496	14.0	1715	14.5	1850	15.5
4.4mm-2.4mm	1360	14.0	1685	15.0	1945	15.5	2110	16.5
4.8mm-2.4mm	1550	15.5	1966	16.0	2248	16.5	2430	17.5
5.2mm-3.2mm	2020	16.0	2359	16.5	2839	17.0	3260	18.0
5.6mm-3.2mm	2270	16.5	2850	17.0	3070	17.5	3580	18.5

SPRINKLER

LUMO

LM9080 ¾"
1.0-4.0bar
10.0-15.0m
0.79-3.0m³/h

Nozzle \ Pressure	1bar		2bar		3bar		4bar	
mm	Flow l/h	Radius m	Flow l/h	Radius m	Flow l/h	Radius m	Flow l/h	Radius m
4.0mm-2.4mm	790	10.0	1110	11.0	1344	12.0	1590	13.0
4.4mm-2.4mm	1020	10.5	1320	11.5	1542	12.5	1824	13.5
4.8mm-3.2mm	1260	11.0	1680	12.0	2160	13.0	2520	14.0
5.2mm-3.2mm	1650	11.5	1920	12.5	2400	13.5	2820	14.5
5.6mm-3.2mm	1962	12.0	2238	13.0	2730	14.0	3024	15.0

LM9146 ¾"
2.0-5.0bar
13.0-17.0m
1.03-3.5m³/h

LM9146B ¾"
2.0-5.0bar
13.0-17.0m
1.03-3.5m³/h

Nozzle \ Pressure	2bar		3bar		4bar		5bar	
mm	Flow l/h	Radius m	Flow l/h	Radius m	Flow l/h	Radius m	Flow l/h	Radius m
3.6mm-2.4mm	1030	13.0	1258	13.5	1442	14.0	1600	14.5
4.0mm-2.4mm	1180	13.5	1456	14.0	1671	14.7	1835	15.0
4.4mm-2.4mm	1360	14.0	1685	14.7	1945	15.2	2110	15.5
4.8mm-2.4mm	1550	14.5	1966	15.2	2248	15.5	2430	16.0
5.2mm-3.2mm	2020	15.0	2359	16.0	2839	16.5	3260	17.0
5.6mm-3.2mm	2270	15.5	2850	16.0	3070	16.7	3580	17.2

SPRINKLER

LUMO

LM9812 ¾&½"
1.5-4.0bar
11.0-16.0m
0.76-3.2m³/h

LM9815 ¾&½"
1.5-4.0bar
11.0-16.0m
0.76-3.2m³/h

LM9020 ¾"
1.5-4.0bar
11.0-16.0m
0.76-3.2m³/h

Nozzle \ Pressure	1.5bar		2bar		3bar		4bar	
mm	Flow l/h	Radius m	Flow l/h	Radius m	Flow l/h	Radius m	Flow l/h	Radius m
3.2mm-2.4mm	760	11.5	860	12.5	1080	13.0	1240	13.5
4.0mm-2.4mm	1030	12.0	1180	13.0	1470	13.5	1680	14.0
4.4mm-2.4mm	1210	12.5	1360	13.5	1690	14.0	1930	14.5
4.8mm-2.4mm	1350	13.5	1550	14.0	1940	14.5	2220	15.0
5.2mm-3.2mm	1750	14.0	2020	14.5	2570	15.0	2960	15.5
5.6mm-3.2mm	1970	14.5	2270	15.0	2850	15.5	3260	16.0

LM9160 ¾"
1.5-5.0bar
12.5-17.5m
0.62-3.6m³/h

Nozzle \ Pressure	1.5bar		2bar		3bar		4bar	
mm	Flow l/h	Radius m	Flow l/h	Radius m	Flow l/h	Radius m	Flow l/h	Radius m
3.2mm-2.4mm	760	12.5	860	12.5	1080	13.3	1240	13.7
4.0mm-2.4mm	1030	13.5	1180	13.7	1470	14.5	1680	15.3
4.4mm-2.4mm	1210	14.0	1360	14.0	1690	15.0	1930	15.7
4.8mm-2.4mm	1350	15.5	1550	14.5	1940	15.6	2220	16.5
5.2mm-3.2mm	1750	16.0	2020	14.7	2570	16.0	2960	17.0
5.6mm-3.2mm	1970	16.5	2270	15.0	2850	16.5	3260	17.5

SPRINKLER

LUMO

LM9718B ¾"
2.0-5.0bar
13.0-17.0m
1.03-3.5m³/h

LM9718 ¾"
2.0-5.0bar
13.0-17.0m
1.03-3.5m³/h

Nozzle \ Pressure	2bar		3bar		4bar		5bar	
mm	Flow l/h	Radius m	Flow l/h	Radius m	Flow l/h	Radius m	Flow l/h	Radius m
3.6mm-2.4mm	1030	13.0	1258	13.5	1442	14.0	1600	14.5
4.0mm-2.4mm	1180	13.5	1456	14.0	1671	14.7	1835	15.0
4.4mm-2.4mm	1360	14.0	1685	14.7	1945	15.2	2110	15.5
4.8mm-2.4mm	1550	14.5	1966	15.2	2248	15.5	2430	16.0
5.2mm-3.2mm	2020	15.0	2359	16.0	2839	16.5	3260	17.0

5.6mm-3.2mm	2270	15.5	2850	16.0	3070	16.7	3580	17.2

LM9710 ½"
1.0-4.0bar
9.0-13.0m
0.38-1.43m³/h

LM9710SD ½"
1.0-4.0bar
9.0-13.0m
0.38-1.43m³/h

LM9710D ½"
1.0-4.0bar
9.0-13.0m
0.38-1.43m³/h

Nozzle \ Pressure	1bar		2bar		3bar		4bar	
mm	Flow l/h	Radius m	Flow l/h	Radius m	Flow l/h	Radius m	Flow l/h	Radius m
2.5mm-1.8mm	380	9.0	480	9.5	590	10.5	685	10.5
2.8mm-1.8mm	440	9.5	560	10.0	690	11.0	800	11.0
3.0mm-1.8mm	590	9.5	710	10.0	840	11.0	970	11.0
3.2mm-1.8mm	610	9.5	750	10.0	900	11.0	1040	11.5
3.5mm-1.8mm	680	10.0	830	10.5	990	11.5	1150	12.0
4.0mm-1.8mm	710	10.5	900	11.5	1220	12.5	1430	13.0

SPRINKLER LUMO

LM9710-1 ½"
1.5-4.0bar
7.0-11.5m
0.28-0.96m³/h

LM9710-1SD ½"
1.5-4.0bar
7.0-11.5m
0.28-0.96m³/h

Nozzle \ Pressure	1bar	2bar	3bar	4bar

mm	Flow l/h	Radius m	Flow l/h	Radius m	Flow l/h	Radius m	Flow l/h	Radius m
2.5mm	280	7.0	350	8.0	430	9.0	490	9.0
2.8mm	360	8.0	450	9.0	550	9.5	630	10.0
3.0mm	400	8.5	500	9.0	615	10.0	715	10.5
3.2mm	465	8.5	595	9.0	735	10.0	845	11.0
3.5mm	520	9.0	675	9.5	830	10.5	965	11.5

LM9715 ½"
2.0-3.0bar
7.5-10.0m
0.35-0.73m³/h

LM9716 ½"
2.0-3.0bar
7.5-10.0m
0.35-0.73m³/h

Nozzle \ Pressure	2bar		2.5bar		3bar		4bar	
mm	Flow l/h	Radius m	Flow l/h	Radius m	Flow l/h	Radius m	Flow l/h	Radius m
2.5mm	355	7.5	400	9.0	440	9.0		
2.8mm	480	9.0	540	9.5	595	10.0		
3.0mm	520	9.0	585	10.0	640	10.0		
3.2mm	595	9.5	670	10.0	730	10.0		

SPRINKLER

LUMO

LM8223 ¾"
1.0-4.0bar
9.0-13.0m
0.38-1.43m³/h

Nozzle \ Pressure	1bar		2bar		3bar		4bar	
mm	Flow l/h	Radius m	Flow l/h	Radius m	Flow l/h	Radius m	Flow l/h	Radius m
2.5mm-1.8mm	380	9.0	480	9.5	590	10.5	685	10.5
2.8mm-1.8mm	440	9.5	560	10.0	690	11.0	800	11.0
3.0mm-1.8mm	590	9.5	710	10.0	840	11.0	970	11.0
3.2mm-1.8mm	610	9.5	750	10.0	900	11.0	1040	11.5
3.5mm-1.8mm	680	10.0	830	10.5	990	11.5	1150	12.0
4.0mm-1.8mm	710	10.5	900	11.5	1220	12.5	1430	13.0

LM9702 ½"

1.0-4.0bar

10.0-13.0m

0.36-1.18m³/h

Nozzle \ Pressure	1bar		2bar		3bar		4bar	
mm	Flow l/h	Radius m	Flow l/h	Radius m	Flow l/h	Radius m	Flow l/h	Radius m
2.8mm	360	10.0	450	10.5	550	11.0	630	11.5
3.0mm	410	10.5	510	11.5	630	12.0	720	12.5
3.2mm	465	10.5	570	11.5	700	12.0	810	13.0
3.5mm	520	10.5	660	11.5	810	12.0	930	13.0
4.0mm	730	11.5	850	12.0	1030	13.0	1180	13.0

SPRINKLER LUMO

LM9701 ½"

1.0-4.0bar

7.0-10.0m

0.36-1.18m³/h

Nozzle \ Pressure	1bar		2bar		3bar		4bar	
mm	Flow l/h	Radius m	Flow l/h	Radius m	Flow l/h	Radius m	Flow l/h	Radius m
2.8mm	360	7.0	450	8.0	550	8.5	630	9.0
3.0mm	410	7.5	510	8.0	630	8.5	720	9.5
3.2mm	465	7.5	570	8.0	700	8.5	810	9.5
3.5mm	520	8.5	660	9.0	810	9.5	930	10.0
4.0mm	730	8.5	850	9.0	1030	9.5	1180	10.0

LM8500 ½&¾"

1.0-4.0bar

10.0-13.0m

0.36-1.18m³/h

Nozzle \ Pressure	1bar		2bar		3bar		4bar	
mm	Flow l/h	Radius m	Flow l/h	Radius m	Flow l/h	Radius m	Flow l/h	Radius m
2.8mm	360	10.0	450	10.5	550	11.0	630	11.5
3.0mm	410	10.5	510	11.5	630	12.0	720	12.5
3.2mm	465	10.5	570	11.5	700	12.0	810	13.0
3.5mm	520	10.5	660	11.5	810	12.0	930	13.0
4.0mm	730	11.5	850	12.0	1030	13.0	1180	13.0

SPRINKLER

LUMO

LM9904
0.5-4.0bar
4.0-8.0m
1.0-1.3m³/h

LM9901
0.5-4.0bar
4.0-7.0m
1.0-1.3m³/h

LM9900
0.5-4.0bar
4.0-7.0m
1.0-1.3m³/h

LM9903
0.5-4.0bar
4.0-7.0m
1.0-1.3m³/h

LM9902
0.5-4.0bar
4.0-8.0m
1.0-1.3m³/h

LM9714
1.0-4.0bar
11.0-13.0m
0.38-2.0m³/h

LM9711
1.0-4.0bar
9.0-13.0m
0.24-1.4m³/h

LM9713
1.0-4.0bar
9.0-13.0m
0.24-1.4m³/h

LM9905
1.0-4.0bar
4.0-8.0m
1.0-1.3m³/h

LM9906
1.0-4.0bar
7.0-10.0m
0.44-1.04m³/h

LM9712
1.0-4.0bar
7.0-10.0m
0.44-1.04m³/h

LUMO 23S +C
1.5-5.0bar
16.5-30.0m
3.7-20.0m³/h

LUMO T1½"&2"
1½", 2"
1.5,1.8m

LUMO 26S+T

SPRINKLER LUMO

LM1022
20,25
32,40
50

LM1021
20,25
30,40
50

LM809
20,25
30,40
50

LM807
½",¾",1"
1¼",1½",2"
2½",3"

LM818
½",¾",1"
1¼",1½",2"
2½",3"

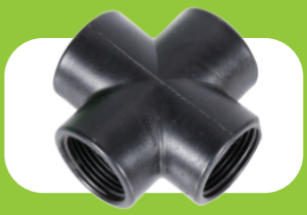

LM1033
½",¾",1"
1¼",1½",2"
2½",3"

LM844
½",¾",1"
1¼",1½",2"
2½",3"

LM808
½",¾",1"
1¼",1½",2"
2½",3"

LM849
½"×¾"
¾"×1"

LM832
16× ¾&½"
20× ¾&½"
25× ¾&½"

LM828
16
20
25

LM836
16× ¾&½"
20× ¾&½"
25× ¾&½"

LM845
16
20
25

LM841
16× ¾&½"
20× ¾&½"
25× ¾&½"

LM847
½"× ¾&1"
1"× ¾&½"
2"× 1&1½"

LM861
0-150l/h

LM862	LM963
0-100l/h	0-100l/h

LM962	LM965
0-70l/h	0-260l/h

LM811F
16

LM812M
16× ¾&½"
20× ¾&½"
25× ¾&½"

LM811M
16
20
25

LM812	LM811
16× ¾&½"	
20× ¾&½"	
25× ¾&½"	

LM814
12,14,16,20mm

LM850
4.0&8.0mm

LM815
12,14,16,20mm

SPRINKLER

LUMO

FOR THE IRRIGATION

FOR THE FUTURE

LUMO®

www.lumaoirrigation.com

YUYAO LUMAO SPRINKLER MANUFACTURING CO.,LTD.

NO 88,ZHENXI ROAD HEMUDU TOWN ,YUYAO CITY, NINGBO ZHEJIANG CHINA

Tel:+86-574-62953276 Cell:+8615867856096. WhatsApp:+8615867856096

Email:eric@lumao.cn. eric@lumaoirrigation.com. Yuanem2008@gmail.com